ZANEEN®

INVADER STANDARD RECESSED

PROJECT	
TYPE	
SPECIFIER	
QUANTITY	
DATE	

A35538- _____ - _____

base number | Finishes (Diamond) | Reflector Options

1.To build a product code in our configurator select the specify button on the base model # product page
2. To build a manual product code on this datasheet choose from the options listed below in blue font and add the suffix to the base model #

GENERAL

Series: Invader Standard
Subseries: Invader Standard
Brand: Prolicht
Division: Architectural
Mounting Type: Recessed
Mounting Location: Ceiling
Subcategory: Downlight

PHYSICAL

Shape: Round
Diameter (mm): 85
Diameter (in): 3 3/8
Height (mm): 105
Height (in): 4 1/8
Ceiling Thickness (mm): 5 - 30
Ceiling Thickness (in): 1/16 - 1 3/16
Min. Recessing Depth (mm): 110
Min. Recessing Depth (in): 4 5/16
Light Distribution: Downlight
Weight (kg): 0.319
Weight (lbs): 0.7
Fixture Finish: SSR / BKV / CWI / CRY / HAB / LAG / UFT / ITA / RUA / RUR / MIC / FTG / MYG / TWT / LOD / PUS / FRO / FUP / KIA / POP / BLS / SPG / MEY / GOH / GUM / CHC / COM / ABZ / JAG
Fixture Material: Aluminum Die Cast
Cut-out Measurements: D = 80mm / 3 1/8"

ELECTRICAL

Lamp Type: LED (Zhaga Standard)
Total Output Wattage (W): 15
Dimming: Dali Dimming
Driver Included: No
Driver Location: Recessed Housing
Housing: See components
Input Voltage (V): 120
Constant Current (MA): 350

LED

Number of LEDs: 1
Color Temperature (°K): Warm Dim
Max. Delivered Lumen (lm): 760
Nominal Lumen (lm): 1140
CRI: >90 CRI
Lamp Life (hrs): 50000

OPTICAL

Reflector°: 20 / 40 / 60

RATINGS AND CERTIFICATIONS

Certified By: Certified for North American Standards
IP rating: IP20

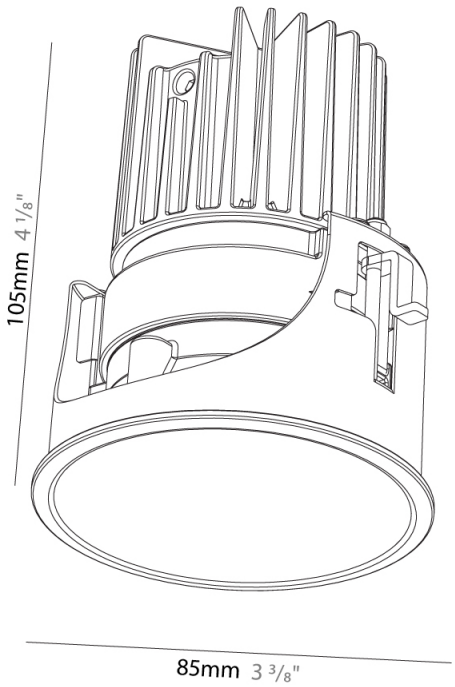

A

Zaneen Group Inc. © 2024, T 1800-388-3382, F 416-247-9319, www.zaneen.com
Available for International specifications by adding 'INT' at the end of the existing Model #. For assistance on 'custom' specifications, contact zteam@zaneen.com.
In a constant effort to supply the best product, we reserve the right to change specifications or materials without notice. The most recent specification sheets are found at zaneen.com

May 12, 2024, 5:19 am

ZANEEN®

PROJECT	
TYPE	
SPECIFIER	
QUANTITY	
DATE	

INVADER STANDARD RECESSED

A35538-

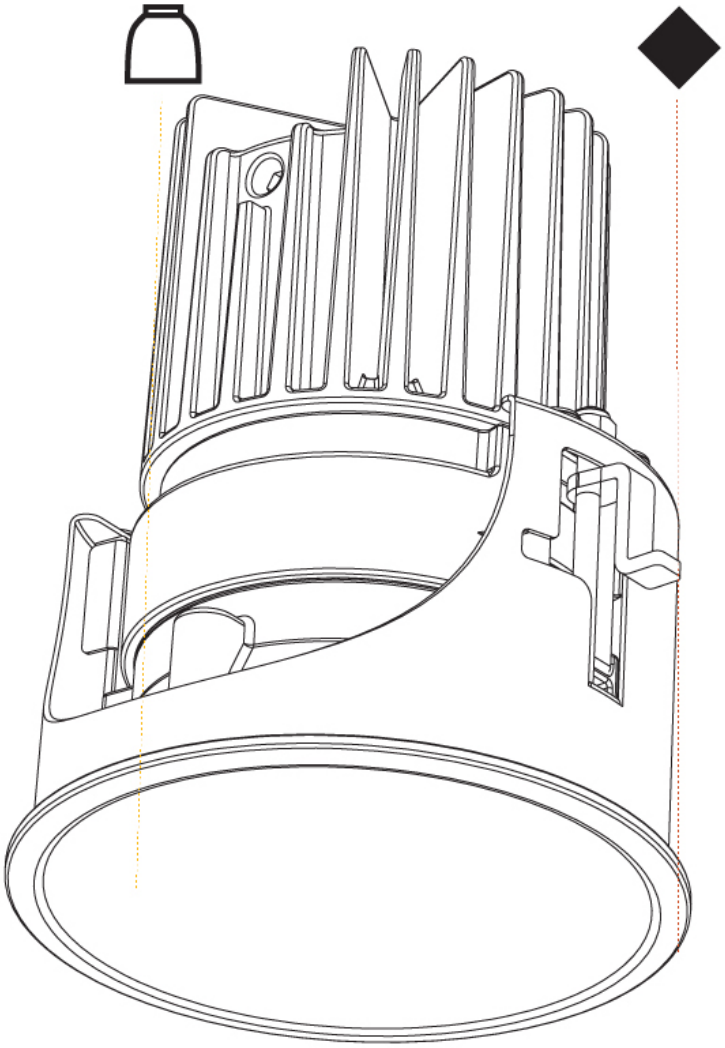

A

Zaneen Group Inc. © 2024, T 1800-388-3382, F 416-247-9319, www.zaneen.com

Available for International specifications by adding 'INT' at the end of the existing Model #. For assistance on 'custom' specifications, contact zteam@zaneen.com.
In a constant effort to supply the best product, we reserve the right to change specifications or materials without notice. The most recent specification sheets are found at zaneen.com

ZANEEN®

PROJECT	
TYPE	
SPECIFIER	
QUANTITY	
DATE	

INVADER ADJUSTABLE RECESSED

A35539- _____ - _____ - _____

base number | Finishes (Diamond) | Finishes (Triangle) | Reflector Options

1.To build a product code in our configurator select the specify button on the base model # product page
2. To build a manual product code on this datasheet choose from the options listed below in blue font and add the suffix to the base model #

GENERAL

Series: Invader Standard
Subseries: Invader Adjustable
Brand: Prolicht
Division: Architectural
Mounting Type: Recessed
Mounting Location: Ceiling
Subcategory: Downlight

PHYSICAL

Shape: Round
Diameter (mm): 109
Diameter (in): 4 5/16
Height (mm): 105
Height (in): 4 1/8
Min. Recessing Depth (mm): 120
Min. Recessing Depth (in): 4 3/4
Light Distribution: Adjustable / Downlight
Weight (kg): 0.421
Weight (lbs): 0.93
Fixture Finish: SSR / BKV / CWI / CRY / HAB / LAG / UFT / ITA / RUA / RUR / MIC / FTG / MYG / TWT / LOD / PUS / FRO / FUP / KIA / POP / BLS / SPG / MEY / GOH / GUM / CHC / COM / ABZ / JAG
Fixture Material: Aluminum
Cut-out Measurements: 104mm / 4 1/8"

ELECTRICAL

Lamp Type: LED
Input Wattage (W): 16.5
Total Output Wattage (W): 15
Dimming: Dali Dimming
Driver Included: No
Driver Location: Recessed Housing
Input Voltage (V): 120
Constant Current (MA): 350

LED

Number of LEDs: 1
Max. Delivered Lumen (lm): 760
Nominal Lumen (lm): 1140
CRI: >90 CRI
Lamp Life (hrs): 50000

OPTICAL

Reflector°: 20 / 40 / 60
Adjustability: Rotational 180°; Tilt 30°

RATINGS AND CERTIFICATIONS

Certified By: CSA Certified to UL and CSA Standards
IP rating: IP20

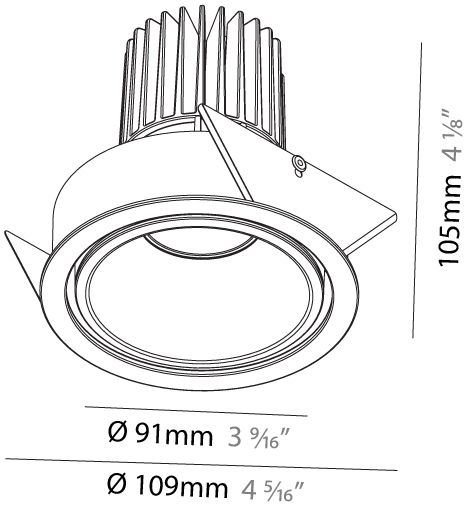

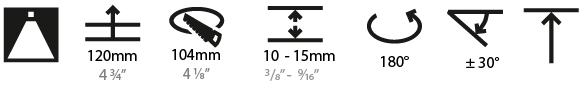

A

Zaneen Group Inc. © 2024, T 1800-388-3382, F 416-247-9319, www.zaneen.com

Available for International specifications by adding 'INT' at the end of the existing Model #. For assistance on 'custom' specifications, contact zteam@zaneen.com.
In a constant effort to supply the best product, we reserve the right to change specifications or materials without notice. The most recent specification sheets are found at zaneen.com

ZANEEN®

PROJECT	
TYPE	
SPECIFIER	
QUANTITY	
DATE	

INVADER ADJUSTABLE RECESSED

A35539-

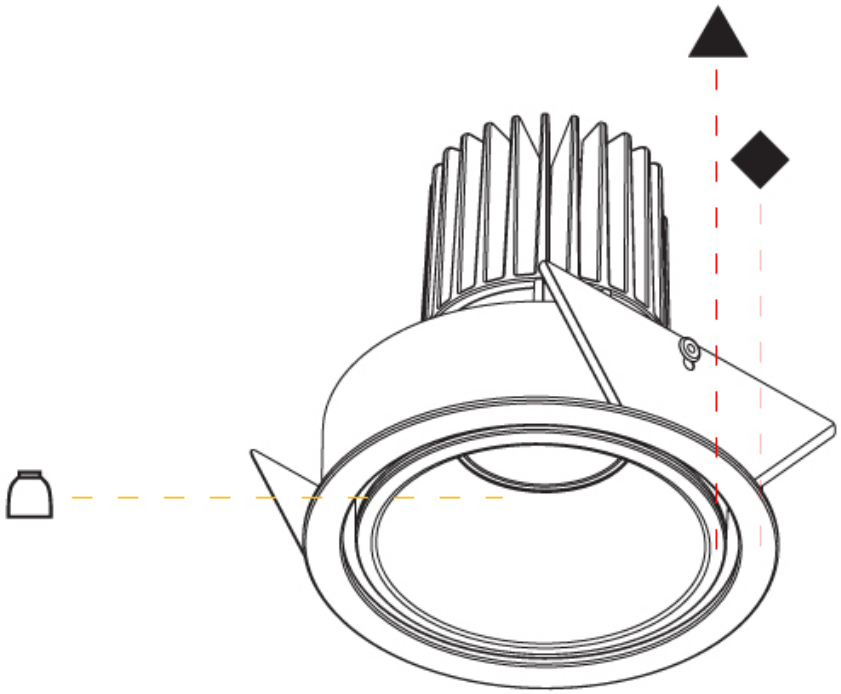

A

Zaneen Group Inc. © 2024, T 1800-388-3382, F 416-247-9319, www.zaneen.com

Available for International specifications by adding 'INT' at the end of the existing Model #. For assistance on 'custom' specifications, contact zteam@zaneen.com.
In a constant effort to supply the best product, we reserve the right to change specifications or materials without notice. The most recent specification sheets are found at zaneen.com

ZANEEN®

PROJECT	
TYPE	
SPECIFIER	
QUANTITY	
DATE	

INVADER ADJUSTABLE RECESSED

A35601- _____ - _____ - _____ - _____

base number	Color Temperature	Finishes (Diamond)	Finishes (Triangle)	Reflector Options

1.To build a product code in our configurator select the specify button on the base model # product page
2. To build a manual product code on this datasheet choose from the options listed below in blue font and add the suffix to the base model #

GENERAL

Series: Invader Standard
Subseries: Invader Adjustable
Brand: Prolicht
Division: Architectural
Mounting Type: Recessed
Mounting Location: Ceiling
Subcategory: Downlight

PHYSICAL

Shape: Round
Diameter (mm): 109
Diameter (in): 4 5/16
Height (mm): 105
Height (in): 4 1/8
Min. Recessing Depth (mm): 120
Min. Recessing Depth (in): 4 3/4
Light Distribution: Adjustable / Direct
Weight (kg): 0.434
Weight (lbs): 0.96
Fixture Finish: SSR / BKV / CWI / CRY / HAB / LAG / UFT / ITA / RUA / RUR / MIC / FTG / MYG / TWT / LOD / PUS / FRO / FUP / KIA / POP / BLS / SPG / MEY / GOH / GUM / CHC / COM / ABZ / JAG
Fixture Material: Aluminum
Cut-out Measurements: 104mm / 4 1/8'

ELECTRICAL

Lamp Type: LED (Zhaga Standard)
Input Wattage (W): 14.3
Total Output Wattage (W): 13
Dimming: Tri-Mode (Non-Dimming and Phase Dimming (120Vac only) and 0-10V Dimming)
Driver Included: No
Driver Location: Recessed Housing
Driver Type: Constant Current - Universal
Housing: See components
Input Voltage (V): 120 - 277
Constant Current (MA): 350

LED

Number of LEDs: 1
Color Temperature (°K): 2700 / 3000 / 3500 / 4000
Max. Delivered Lumen (lm): 890 / 920 / 970 / 990
Nominal Lumen (lm): 1304 / 1352 / 1421 / 1450
CRI: >90 CRI
Lamp Life (hrs): 50000

OPTICAL

Reflector°: 20 / 40 / 60
Adjustability: Rotational 180°; Tilt 30°

RATINGS AND CERTIFICATIONS

Certified By: Certified for North American Standards
IP rating: IP20

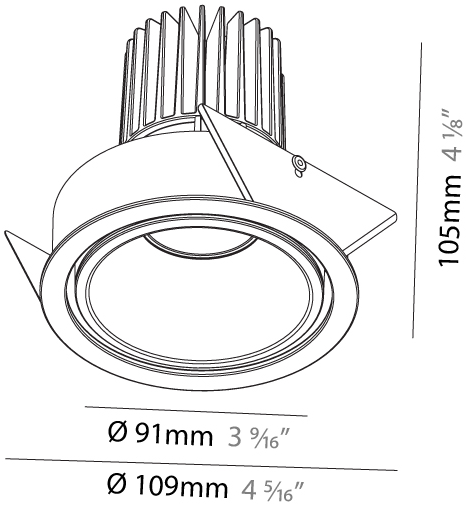

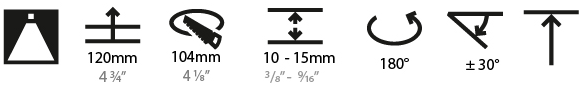

A

Zaneen Group Inc. © 2024, T 1800-388-3382, F 416-247-9319, www.zaneen.com
Available for International specifications by adding 'INT' at the end of the existing Model #. For assistance on 'custom' specifications, contact zteam@zaneen.com.
In a constant effort to supply the best product, we reserve the right to change specifications or materials without notice. The most recent specification sheets are found at zaneen.com

ZANEEN®

PROJECT	
TYPE	
SPECIFIER	
QUANTITY	
DATE	

INVADER ADJUSTABLE RECESSED

A35601-

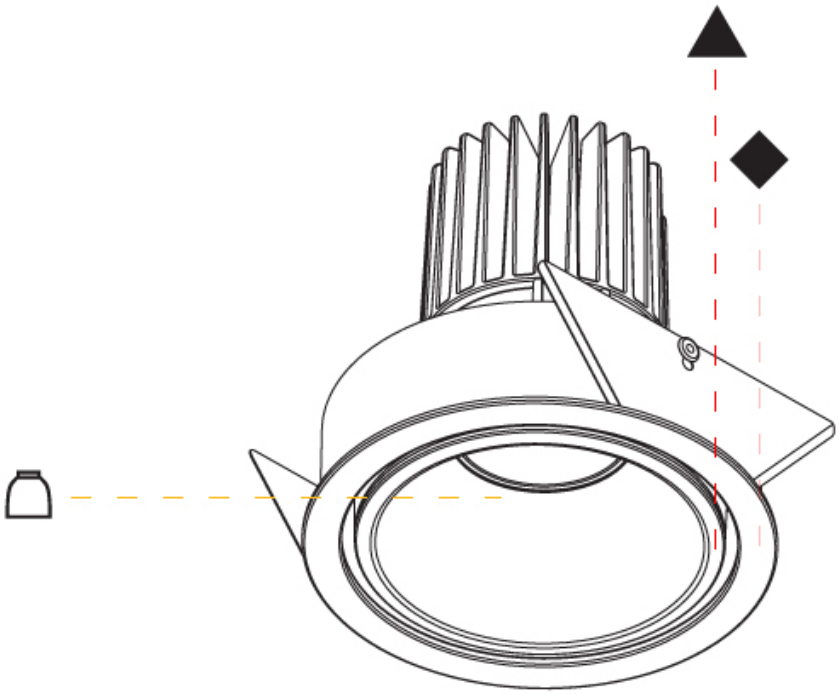

A

Zaneen Group Inc. © 2024, T 1800-388-3382, F 416-247-9319, www.zaneen.com

Available for International specifications by adding 'INT' at the end of the existing Model #. For assistance on 'custom' specifications, contact zteam@zaneen.com.
In a constant effort to supply the best product, we reserve the right to change specifications or materials without notice. The most recent specification sheets are found at zaneen.com

ZANEEN®

PROJECT	
TYPE	
SPECIFIER	
QUANTITY	
DATE	

INVADER STANDARD RECESSED

A35602- _____ - _____ - _____

base number | Color Temperature | Finishes (Diamond) | Reflector Options

1.To build a product code in our configurator select the specify button on the base model # product page
2. To build a manual product code on this datasheet choose from the options listed below in blue font and add the suffix to the base model #

GENERAL

Series: Invader Standard
Subseries: Invader Standard
Brand: Prolicht
Division: Architectural
Mounting Type: Recessed
Mounting Location: Ceiling
Subcategory: Downlight

PHYSICAL

Shape: Round
Diameter (mm): 85
Diameter (in): 3 3/8
Height (mm): 105
Height (in): 4 1/8
Ceiling Thickness (mm): 5 - 30
Min. Recessing Depth (mm): 110
Min. Recessing Depth (in): 4 5/16
Light Distribution: Downlight
Weight (kg): 0.322
Weight (lbs): 0.71
Fixture Finish: SSR / BKV / CWI / CRY / HAB / LAG / UFT / ITA / RUA / RUR / MIC / FTG / MYG / TWT / LOD / PUS / FRO / FUP / KIA / POP / BLS / SPG / MEY / GOH / GUM / CHC / COM / ABZ / JAG
Fixture Material: Aluminum
Cut-out Measurements: Dia: 80mm 3 1/8"

ELECTRICAL

Lamp Type: LED (Zhaga Standard)
Input Wattage (W): 14.3
Total Output Wattage (W): 13
Dimming: Tri-Mode (Non-Dimming and Phase Dimming (120Vac only) and 0-10V Dimming)
Driver Included: No
Driver Location: Recessed Housing
Driver Type: Constant Current - Universal
Housing: See components
Input Voltage (V): 120 - 277
Constant Current (MA): 350

LED

Number of LEDs: 1
Color Temperature (°K): 2700 / 3000 / 3500 / 4000
Max. Delivered Lumen (lm): 870 / 910 / 951 / 970
Nominal Lumen (lm): 1304 / 1352 / 1421 / 1450
CRI: >90 CRI
Lamp Life (hrs): 50000

OPTICAL

Reflector°: 20 / 40 / 60

RATINGS AND CERTIFICATIONS

Certified By: Certified for North American Standards
IP rating: IP20

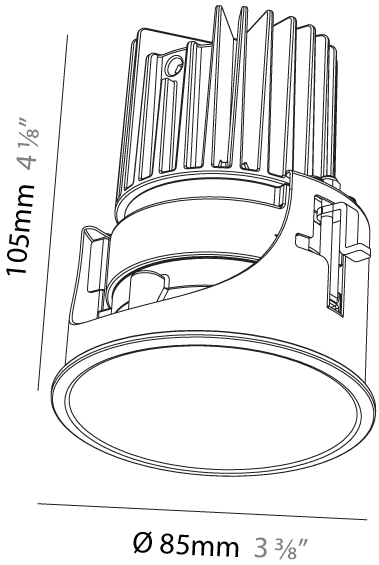

A

Zaneen Group Inc. © 2024, T 1800-388-3382, F 416-247-9319, www.zaneen.com

Available for International specifications by adding 'INT' at the end of the existing Model #. For assistance on 'custom' specifications, contact zteam@zaneen.com.
In a constant effort to supply the best product, we reserve the right to change specifications or materials without notice. The most recent specification sheets are found at zaneen.com

ZANEEN®

INVADER STANDARD RECESSED

PROJECT	
TYPE	
SPECIFIER	
QUANTITY	
DATE	

A35602-

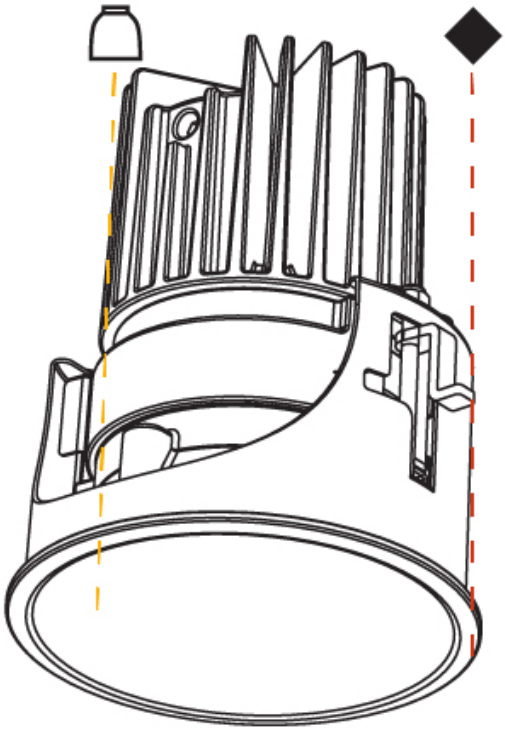

A

Zaneen Group Inc. © 2024, T 1800-388-3382, F 416-247-9319, www.zaneen.com

Available for International specifications by adding 'INT' at the end of the existing Model #. For assistance on 'custom' specifications, contact zteam@zaneen.com.
In a constant effort to supply the best product, we reserve the right to change specifications or materials without notice. The most recent specification sheets are found at zaneen.com

ZANEEN®

PROJECT	
TYPE	
SPECIFIER	
QUANTITY	
DATE	

INVADER STANDARD RECESSED

A35603- _____ - _____ - _____

base number | Color Temperature | Finishes (Diamond) | Reflector Options

1.To build a product code in our configurator select the specify button on the base model # product page
2. To build a manual product code on this datasheet choose from the options listed below in blue font and add the suffix to the base model #

GENERAL

Series: Invader Standard
Subseries: Invader Standard
Brand: Prolicht
Division: Architectural
Mounting Type: Recessed
Mounting Location: Ceiling
Subcategory: Downlight

PHYSICAL

Shape: Round
Diameter (mm): 85
Diameter (in): 3 3/8
Height (mm): 87
Height (in): 3 7/16
Ceiling Thickness (mm): 10 / 12.5 / 15
Ceiling Thickness (in): 3/8 or 1/2 or 9/16
Min. Recessing Depth (mm): 90
Light Distribution: Downlight
Weight (kg): 0.233
Weight (lbs): 0.51
Fixture Material: Aluminum Die Cast
Cut-out Measurements: Dia: 80mm 3 1/8"

ELECTRICAL

Lamp Type: LED (Zhaga Standard)
Input Wattage (W): 9.9
Total Output Wattage (W): 9
Dimming: Tri-Mode (Non-Dimming and Phase Dimming (120Vac only) and 0-10V Dimming)
Driver Included: No
Driver Location: Recessed Housing
Driver Type: Constant Current - Universal
Housing: See components
Input Voltage (V): 120 - 277
Constant Current (MA): 250

LED

Number of LEDs: 1
Color Temperature (°K): 2700 / 3000 / 3500 / 4000
Max. Delivered Lumen (lm): 650 / 680 / 715 /730
Nominal Lumen (lm): 960 / 995 / 1046 / 1067
CRI: >90 CRI
Lamp Life (hrs): 50000

OPTICAL

Reflector°: 20 / 40 / 60

RATINGS AND CERTIFICATIONS

Certified By: Certified for North American Standards
IP rating: IP20

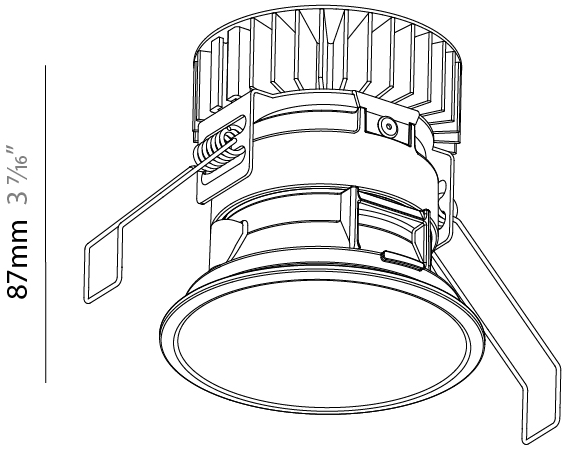

A

Zaneen Group Inc. © 2024, T 1800-388-3382, F 416-247-9319, www.zaneen.com

Available for International specifications by adding 'INT' at the end of the existing Model #. For assistance on 'custom' specifications, contact zteam@zaneen.com.
In a constant effort to supply the best product, we reserve the right to change specifications or materials without notice. The most recent specification sheets are found at zaneen.com

ZANEEN®

INVADER STANDARD RECESSED

PROJECT	
TYPE	
SPECIFIER	
QUANTITY	
DATE	

A35603-

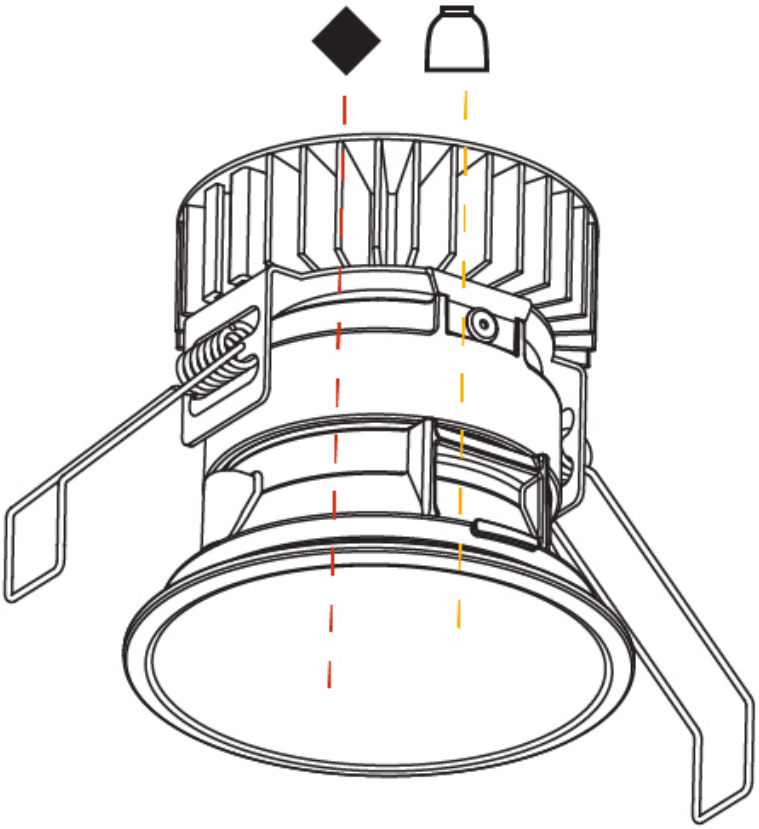

A

Zaneen Group Inc. © 2024, T 1800-388-3382, F 416-247-9319, www.zaneen.com

Available for International specifications by adding 'INT' at the end of the existing Model #. For assistance on 'custom' specifications, contact zteam@zaneen.com.
In a constant effort to supply the best product, we reserve the right to change specifications or materials without notice. The most recent specification sheets are found at zaneen.com

ZANEEN®

PROJECT	
TYPE	
SPECIFIER	
QUANTITY	
DATE	

INVADER STANDARD RECESSED

A35604- _____ - _____ - _____

base number | Color Temperature | Finishes (Diamond) | Reflector Options

1.To build a product code in our configurator select the specify button on the base model # product page
2. To build a manual product code on this datasheet choose from the options listed below in blue font and add the suffix to the base model #

GENERAL

Series: Invader Standard
Subseries: Invader Standard
Brand: Prolicht
Division: Architectural
Mounting Type: Recessed
Mounting Location: Ceiling
Subcategory: Downlight

PHYSICAL

Shape: Round
Diameter (mm): 85
Diameter (in): 3 3/8
Height (mm): 105
Height (in): 4 1/8
Ceiling Thickness (mm): 5 - 30
Ceiling Thickness (in): 3/16 - 1 3/16
Min. Recessing Depth (mm): 110
Min. Recessing Depth (in): 4 5/16
Light Distribution: Downlight
Weight (kg): 0.322
Weight (lbs): 0.71
Installation Requirement: Non-insulated Ceiling only
Fixture Finish: SSR / BKV / CWI / CRY / HAB / LAG / UFT / ITA / RUA / RUR / MIC / FTG / MYG / TWT / LOD / PUS / FRO / FUP / KIA / POP / BLS / SPG / MEY / GOH / GUM / CHC / COM / ABZ / JAG
Fixture Material: Aluminum Die Cast
Cut-out Measurements: D = 80mm / 3 1/8"

ELECTRICAL

Lamp Type: LED (Zhaga Standard)
Input Wattage (W): 14.3
Total Output Wattage (W): 13
Dimming: Tri-Mode (Non-Dimming and Phase Dimming (120Vac only) and 0-10V Dimming)
Driver Included: No
Driver Location: Recessed Housing
Driver Type: Constant current - Universal
Housing: See components
Input Voltage (V): 120 - 277
Constant Current (MA): 350

LED

Number of LEDs: 1
Color Temperature (°K): 2700 / 3000 / 3500 / 4000
Max. Delivered Lumen (lm): 880 / 920 / 960 / 990
Nominal Lumen (lm): 1304 / 1352 / 1421 / 1450
CRI: >90 CRI
Lamp Life (hrs): 50000

OPTICAL

Reflector°: 20 / 42 / 60
Adjustability: Fixed

RATINGS AND CERTIFICATIONS

Certified By: Certified for North American Standards
IP rating: IP65

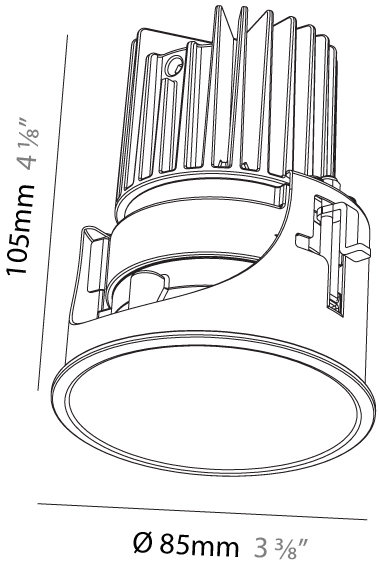

A

Zaneen Group Inc. © 2024, T 1800-388-3382, F 416-247-9319, www.zaneen.com
Available for International specifications by adding 'INT' at the end of the existing Model #. For assistance on 'custom' specifications, contact zteam@zaneen.com.
In a constant effort to supply the best product, we reserve the right to change specifications or materials without notice. The most recent specification sheets are found at zaneen.com

ZANEEN®

INVADER STANDARD RECESSED

PROJECT	
TYPE	
SPECIFIER	
QUANTITY	
DATE	

A35604-

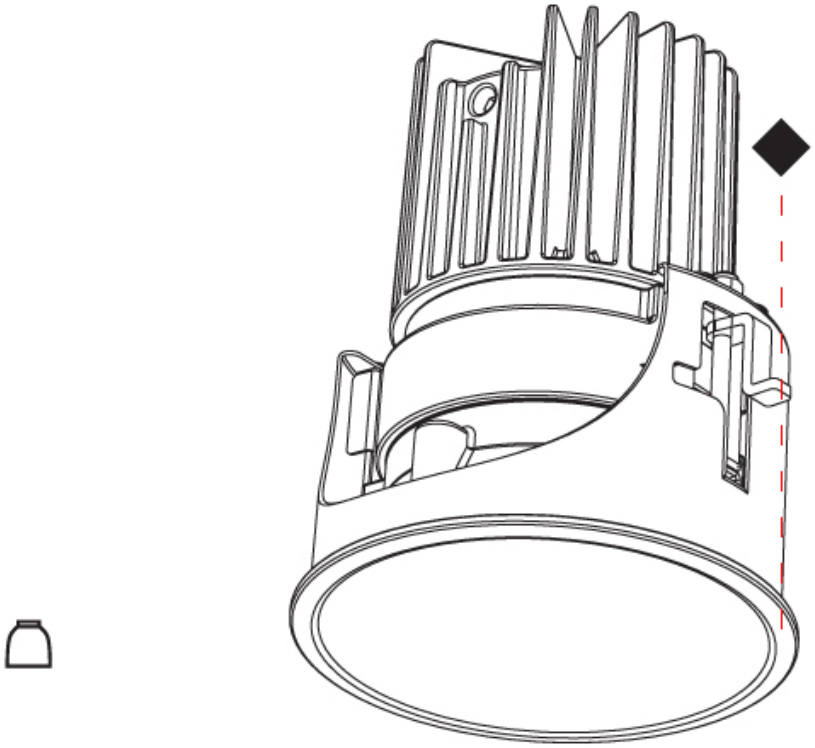

A

Zaneen Group Inc. © 2024, T 1800-388-3382, F 416-247-9319, www.zaneen.com

Available for International specifications by adding 'INT' at the end of the existing Model #. For assistance on 'custom' specifications, contact zteam@zaneen.com.
In a constant effort to supply the best product, we reserve the right to change specifications or materials without notice. The most recent specification sheets are found at zaneen.com

ZANEEN®

PROJECT	
TYPE	
SPECIFIER	
QUANTITY	
DATE	

INVADER STANDARD RECESSED

A37946- _____ - _____ - _____

base number | Color Temperature | Finishes (Diamond) | Reflector Options

1.To build a product code in our configurator select the specify button on the base model # product page
2. To build a manual product code on this datasheet choose from the options listed below in blue font and add the suffix to the base model #

GENERAL

Series: Invader Standard
Subseries: Invader Standard
Brand: Prolicht
Division: Architectural
Mounting Type: Recessed
Mounting Location: Ceiling
Subcategory: Downlight

PHYSICAL

Shape: Round
Diameter (mm): 148
Diameter (in): 5 13/16
Height (mm): 130
Height (in): 5 1/8
Ceiling Thickness (mm): 5 - 30
Ceiling Thickness (in): 1/16 - 1 3/16
Min. Recessing Depth (mm): 140
Min. Recessing Depth (in): 5 1/2
Light Distribution: Downlight
Weight (kg): 0.9
Weight (lbs): 1.98
Fixture Finish: SSR / BKV / CWI / CRY / HAB / LAG / UFT / ITA / RUA / RUR / MIC / FTG / MYG / TWT / LOD / PUS / FRO / FUP / KIA / POP / BLS / SPG / MEY / GOH / GUM / CHC / COM / ABZ / JAG
Fixture Material: Aluminum Die Cast
Cut-out Measurements: 142mm / 5 9/16"

ELECTRICAL

Lamp Type: LED (Zhaga Standard)
Input Wattage (W): 28.6
Total Output Wattage (W): 26
Dimming: Tri-Mode (Non-Dimming and Phase Dimming (120Vac only) and 0-10V Dimming)
Driver Included: No
Driver Location: Recessed Housing
Driver Type: Constant Current - Universal
Housing: See components
Input Voltage (V): 120 - 277
Constant Current (MA): 700

LED

Number of LEDs: 1
Color Temperature (°K): 2700 / 3000 / 3500 / 4000
Max. Delivered Lumen (lm): 2210 / 2270 / 2391 / 2440
Nominal Lumen (lm): 3210 / 3290 / 3459
CRI: >90 CRI
Lamp Life (hrs): 50000

OPTICAL

Reflector°: 18 / 26 / 40

RATINGS AND CERTIFICATIONS

Certified By: Certified for North American Standards
IP rating: IP20

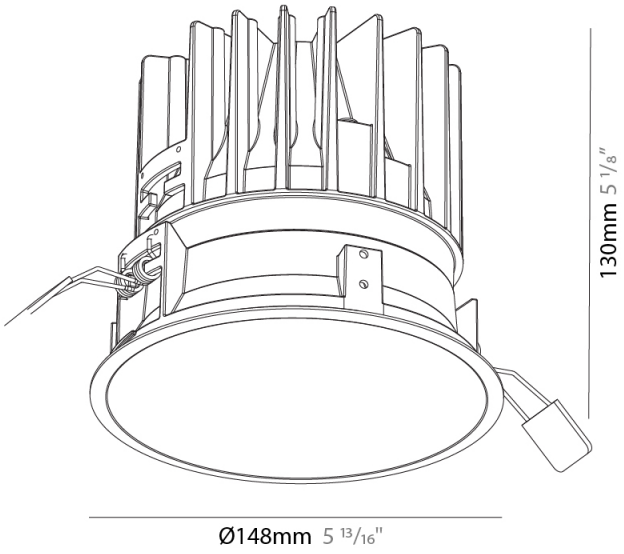

A

Zaneen Group Inc. © 2024, T 1800-388-3382, F 416-247-9319, www.zaneen.com
Available for International specifications by adding 'INT' at the end of the existing Model #. For assistance on 'custom' specifications, contact zteam@zaneen.com.
In a constant effort to supply the best product, we reserve the right to change specifications or materials without notice. The most recent specification sheets are found at zaneen.com

ZANEEN®

PROJECT	
TYPE	
SPECIFIER	
QUANTITY	
DATE	

INVADER STANDARD RECESSED

A37946-

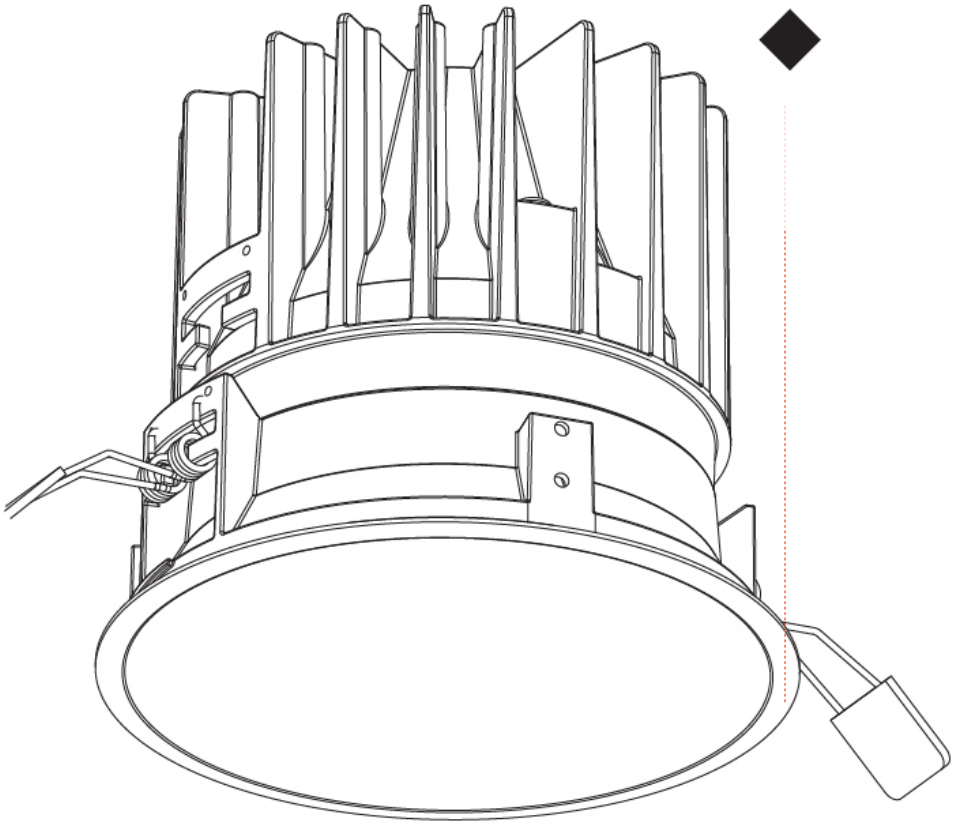

A

Zaneen Group Inc. © 2024, T 1800-388-3382, F 416-247-9319, www.zaneen.com

Available for International specifications by adding 'INT' at the end of the existing Model #. For assistance on 'custom' specifications, contact zteam@zaneen.com.
In a constant effort to supply the best product, we reserve the right to change specifications or materials without notice. The most recent specification sheets are found at zaneen.com

ZANEEN®

PROJECT	
TYPE	
SPECIFIER	
QUANTITY	
DATE	

INVADER STANDARD RECESSED

A37952- _____ - _____ - _____

base number | Color Temperature | Finishes (Diamond) | Lens Options

1.To build a product code in our configurator select the specify button on the base model # product page
2. To build a manual product code on this datasheet choose from the options listed below in blue font and add the suffix to the base model #

GENERAL

Series: Invader Standard
Subseries: Invader Standard
Brand: Prolicht
Division: Architectural
Mounting Type: Recessed
Mounting Location: Ceiling
Subcategory: Downlight

PHYSICAL

Shape: Round
Diameter (mm): 45
Diameter (in): 1 3/4
Height (mm): 49
Height (in): 1 15/16
Ceiling Thickness (mm): 10 / 12.5 / 15
Ceiling Thickness (in): 3/8 or 1/2 or 9/16
Min. Recessing Depth (mm): 150
Min. Recessing Depth (in): 5 7/8
Light Distribution: Downlight
Weight (kg): 0.084
Weight (lbs): 0.185
Fixture Finish: SSR / BKV / CWI / CRY / HAB / LAG / UFT / ITA / RUA / RUR / MIC / FTG / MYG / TWT / LOD / PUS / FRO / FUP / KIA / POP / BLS / SPG / MEY / GOH / GUM / CHC / COM / ABZ / JAG
Fixture Material: Aluminum
Cut-out Measurements: Dia: 41mm / 1 5/8"

ELECTRICAL

Lamp Type: LED (Zhaga Standard)
Input Wattage (W): 2.2
Total Output Wattage (W): 2
Dimming: Non-Dimmable
Driver Included: No
Driver Location: Remote
Driver Type: Constant Current - 120 / 277Vac
Driver Class: Class 2
Input Voltage (V): 120 - 277
Constant Current (MA): 700
Upon Request: 0-10Vdc dimming / Phase dimming 120Vac

LED

Number of LEDs: 1
Color Temperature (°K): 2700 / 3000 / 3500 / 4000
Max. Delivered Lumen (lm): 160 / 170 / 176 / 180
Nominal Lumen (lm): 160 / 170 / 176 / 180
CRI: >90 CRI
Lamp Life (hrs): 50000

OPTICAL

Reflector°: 12 / 20 / 35

RATINGS AND CERTIFICATIONS

Certified By: Certified for North American Standards
IP rating: IP20

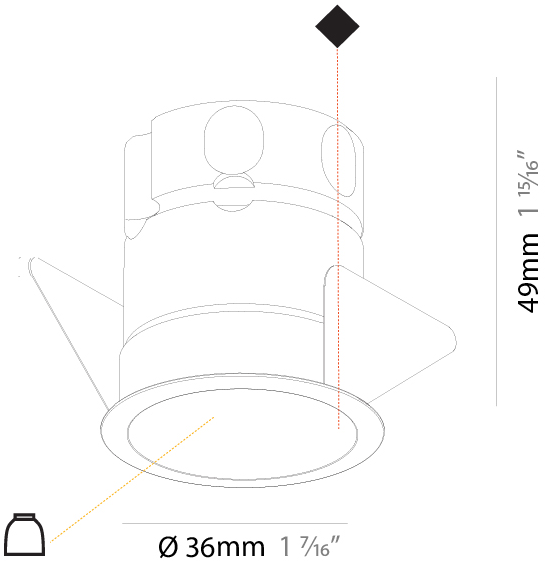

A

Zaneen Group Inc. © 2024, T 1800-388-3382, F 416-247-9319, www.zaneen.com

Available for International specifications by adding 'INT' at the end of the existing Model #. For assistance on 'custom' specifications, contact zteam@zaneen.com.
In a constant effort to supply the best product, we reserve the right to change specifications or materials without notice. The most recent specification sheets are found at zaneen.com

ZANEEN®

INVADER STANDARD RECESSED

PROJECT	
TYPE	
SPECIFIER	
QUANTITY	
DATE	

A37952-

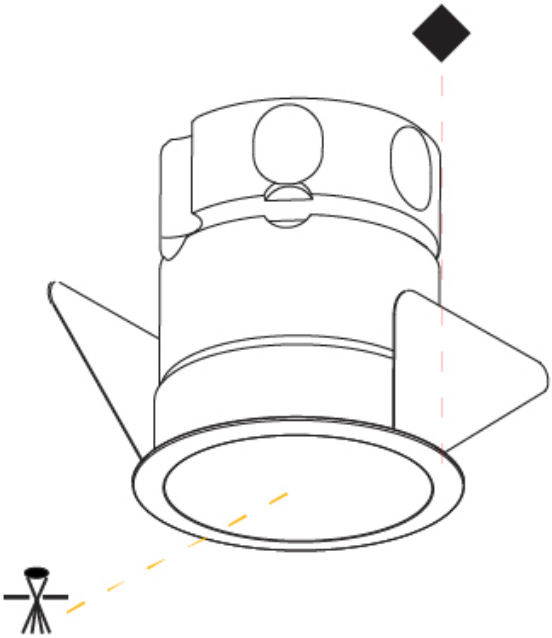

A

Zaneen Group Inc. © 2024, T 1800-388-3382, F 416-247-9319, www.zaneen.com

Available for International specifications by adding 'INT' at the end of the existing Model #. For assistance on 'custom' specifications, contact zteam@zaneen.com.
In a constant effort to supply the best product, we reserve the right to change specifications or materials without notice. The most recent specification sheets are found at zaneen.com

ZANEEN®

PROJECT	
TYPE	
SPECIFIER	
QUANTITY	
DATE	

INVADER STANDARD RECESSED

A37959- _____ - _____ - _____

base number | Color Temperature | Finishes (Diamond) | Reflector Options

1.To build a product code in our configurator select the specify button on the base model # product page
2. To build a manual product code on this datasheet choose from the options listed below in blue font and add the suffix to the base model #

GENERAL

Series: Invader Standard
Subseries: Invader Standard
Brand: Prolicht
Division: Architectural
Mounting Type: Recessed
Mounting Location: Ceiling
Subcategory: Downlight

PHYSICAL

Shape: Round
Diameter (mm): 45
Diameter (in): 1 3/4
Height (mm): 71
Height (in): 2 13/16
Ceiling Thickness (mm): 10 / 12.5 / 15
Ceiling Thickness (in): 3/8 or 1/2 or 9/16
Min. Recessing Depth (mm): 150
Min. Recessing Depth (in): 5 7/8
Light Distribution: Downlight
Weight (kg): 0.102
Weight (lbs): 0.23
Fixture Finish: SSR / BKV / CWI / CRY / HAB / LAG / UFT / ITA / RUA / RUR / MIC / FTG / MYG / TWT / LOD / PUS / FRO / FUP / KIA / POP / BLS / SPG / MEY / GOH / GUM / CHC / COM / ABZ / JAG
Fixture Material: Aluminum
Cut-out Measurements: Dia: 41mm / 1 5/8"

ELECTRICAL

Lamp Type: LED (Zhaga Standard)
Input Wattage (W): 7.7
Total Output Wattage (W): 7
Dimming: Non-Dimmable
Driver Included: No
Driver Location: Remote
Driver Type: Constant Current - 120 / 277Vac
Driver Class: Class 2
Input Voltage (V): 120 - 277
Constant Current (MA): 250
Upon Request: 0-10Vdc dimming / Phase dimming 120Vac

LED

Number of LEDs: 1
Color Temperature (°K): 2700 / 3000 / 3500 / 4000
Max. Delivered Lumen (lm): 630 / 650 / 686 / 700
Nominal Lumen (lm): 731 / 762 / 801 / 817
CRI: >90 CRI
Lamp Life (hrs): 50000

OPTICAL

Reflector°: 33 / 47 / 65

RATINGS AND CERTIFICATIONS

Certified By: Certified for North American Standards
IP rating: IP20

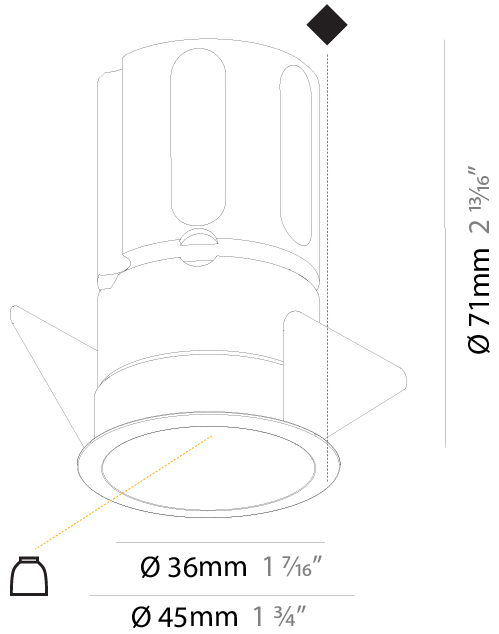

Zaneen Group Inc. © 2024, T 1800-388-3382, F 416-247-9319, www.zaneen.com
Available for International specifications by adding 'INT' at the end of the existing Model #. For assistance on 'custom' specifications, contact zteam@zaneen.com.
In a constant effort to supply the best product, we reserve the right to change specifications or materials without notice. The most recent specification sheets are found at zaneen.com

ZANEEN®

INVADER STANDARD RECESSED

PROJECT	
TYPE	
SPECIFIER	
QUANTITY	
DATE	

A37959-

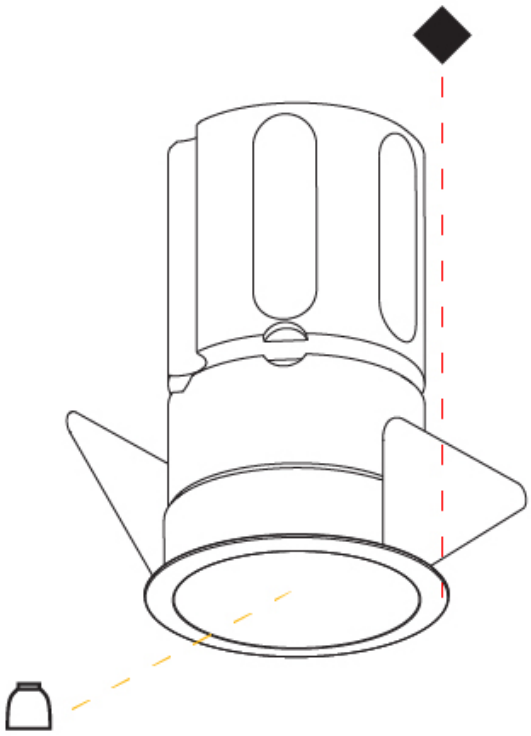

A

Zaneen Group Inc. © 2024, T 1800-388-3382, F 416-247-9319, www.zaneen.com

Available for International specifications by adding 'INT' at the end of the existing Model #. For assistance on 'custom' specifications, contact zteam@zaneen.com.
In a constant effort to supply the best product, we reserve the right to change specifications or materials without notice. The most recent specification sheets are found at zaneen.com

ZANEEN®

PROJECT	
TYPE	
SPECIFIER	
QUANTITY	
DATE	

INVADER ADJUSTABLE RECESSED

A37962- _____ - _____ - _____ - _____

base number	Color Temperature	Finishes (Diamond)	Finishes (Triangle)	Reflector Options

1.To build a product code in our configurator select the specify button on the base model # product page
2. To build a manual product code on this datasheet choose from the options listed below in blue font and add the suffix to the base model #

GENERAL

Series: Invader Standard
Subseries: Invader Adjustable
Brand: Prolicht
Division: Architectural
Mounting Type: Recessed
Mounting Location: Ceiling
Subcategory: Downlight

PHYSICAL

Shape: Round
Diameter (mm): 62
Diameter (in): 2 $^{7}/_{16}$
Height (mm): 74
Height (in): 2 $^{15}/_{16}$
Min. Recessing Depth (mm): 150
Min. Recessing Depth (in): 5 $^{7}/_{8}$
Light Distribution: Adjustable / Direct
Weight (kg): 0.138
Weight (lbs): 0.304
Fixture Finish: SSR / BKV / CWI / CRY / HAB / LAG / UFT / ITA / RUA / RUR / MIC / FTG / MYG / TWT / LOD / PUS / FRO / FUP / KIA / POP / BLS / SPG / MEY / GOH / GUM / CHC / COM / ABZ / JAG
Fixture Material: Aluminum
Cut-out Measurements: 57mm / 2 1/4"

ELECTRICAL

Lamp Type: LED (Zhaga Standard)
Input Wattage (W): 7.7
Total Output Wattage (W): 7
Dimming: Tri-Mode (Non-Dimming and Phase Dimming (120Vac only) and 0-10V Dimming)
Driver Included: No
Driver Location: Remote
Driver Type: Constant Current - 120 / 277Vac
Input Voltage (V): 120 - 277
Constant Current (MA): 250

LED

Number of LEDs: 1
Color Temperature (°K): 2700 / 3000 / 3500 / 4000
Max. Delivered Lumen (lm): 660 / 690 / 725 / 740
CRI: >90 CRI
Lamp Life (hrs): 50000

OPTICAL

Reflector°: 33 / 47 / 65
Adjustability: Rotational 180°; Tilt 30°

RATINGS AND CERTIFICATIONS

Certified By: Certified for North American Standards
IP rating: IP20

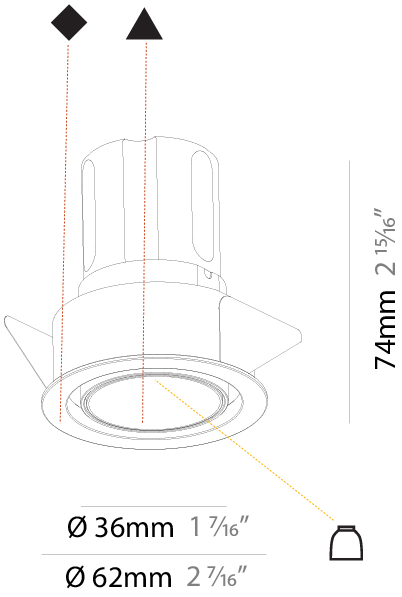

A

Zaneen Group Inc. © 2024, T 1800-388-3382, F 416-247-9319, www.zaneen.com
Available for International specifications by adding 'INT' at the end of the existing Model #. For assistance on 'custom' specifications, contact zteam@zaneen.com.
In a constant effort to supply the best product, we reserve the right to change specifications or materials without notice. The most recent specification sheets are found at zaneen.com

ZANEEN®

PROJECT	
TYPE	
SPECIFIER	
QUANTITY	
DATE	

INVADER ADJUSTABLE RECESSED

A37962-

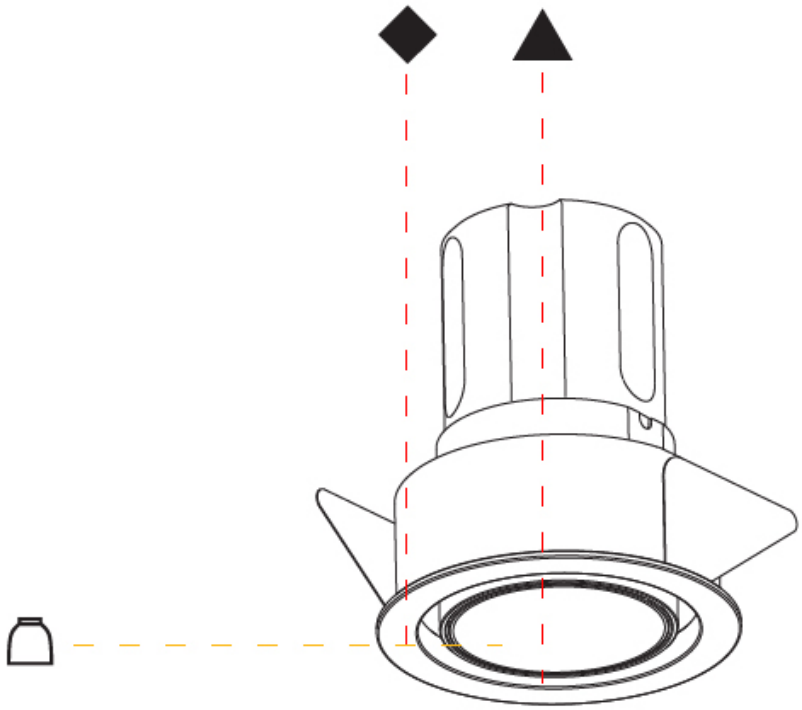

A

Zaneen Group Inc. © 2024, T 1800-388-3382, F 416-247-9319, www.zaneen.com

Available for International specifications by adding 'INT' at the end of the existing Model #. For assistance on 'custom' specifications, contact zteam@zaneen.com.
In a constant effort to supply the best product, we reserve the right to change specifications or materials without notice. The most recent specification sheets are found at zaneen.com

ZANEEN®

INVADER STANDARD

COLOR FINISH CHART

PROJECT	
TYPE	
SPECIFIER	
QUANTITY	
DATE	

Fixture Finish

Sparkling Silver - 01 (SSR)

Black Velvet - 02 (BKV)

Crystal White - 03 (CWI)

Creamy - 04 (CRY)

Hampton Bay - 05 (HAB)

Lagoon - 06 (LAG)

Urban Forest - 07 (UFT)

In the Army - 08 (ITA)

Rusty Angel - 09 (RUA)

Rusty Rush - 10 (RUR)

Milk and Chocolate - 11 (MIC)

Fade to Gray - 12 (FTG)

Mysterious Gray - 13 (MYG)

Twilight - 14 (TWT)

Lost Dream - 15 (LOD)

Purple Sky - 16 (PUS)

Fresh Oh - 17 (FRO)

Funky P. - 18 (FUP)

Kissing Aphrodite - 19 (KIA)

Poseidon's Paradise - 20 (POP)

Blue Sky - 21 (BLS)

Spring Green - 22 (SPG)

Mellow Yellow - 23 (MEY)

Golden Heart - 24 (GOH)

Gun Metal - 25 (GUM)

Champagne Cream - 26 (CHC)

Copper Mine - 27 (COM)

Ancient Bronze - 28 (ABZ)

Jazz Gold - 29 (JAG)

Digital: Not all screens are calibrated the same, and therefore, colors will appear differently between screens.
Physical: When texture is involved, there will be variations in color, character and tone within a product series and between product families.

Gun Metal: No Gun Metal finish is alike. It combines a mixture of transparent and black color particles which ensures a highly individual effect and no luminaire being identical.
Champagne Cream, Copper Mine, Ancient Bronze + Jazz Gold: These finishes have slight fading from specific powder coating production. Each luminaire will slightly vary.

A

Zaneen Group Inc. © 2024, T 1800-388-3382, F 416-247-9319, www.zaneen.com

Available for International specifications by adding 'INT' at the end of the existing Model #. For assistance on 'custom' specifications, contact zteam@zaneen.com.
In a constant effort to supply the best product, we reserve the right to change specifications or materials without notice. The most recent specification sheets are found at zaneen.com

ZANEEN®

INVADER STANDARD

PROJECT	
TYPE	
SPECIFIER	
QUANTITY	
DATE	

LEGEND

	floor-mounted		pivotable		special LED (upon request) RGB, RGBW, tunable, gold+, meat+, art+, fashion+
	wall and ceiling: recessed and surface mounted		rotating		warm dim / natural dimming LED
	ceiling-mounted and wall-mounted		illuminate tilted		rechargeable battery powered
	wall-mounted		color of suspension cable		fixture with natural vivid LED (upon request)
	omni-directional light distribution		length of suspension cable	CRI	color rendering index
	direct light distribution		reflector degree selection	°K	color temperature
	direct/indirect light distribution		super spot	LM	lumen (luminous flux)
	indirect light distribution		lens	LM/W	efficacy (lumens per watt)
	asymmetric light distribution		lens pack	UGR	Unified Glare Rating (UGR) range from 5-40
	aura light distribution		shine ring	316	marine grade (AISI 316 stainless steel)
	round wall or ceiling cut-out		integrated shine ring with diffuser		walk on
	square wall or ceiling cut-out		free individual colors 01-29		drive on
	the supplied jig specifies the cutout dimensions		individual colors: 00 (free of charge), 01-25 (extra charge)	DSC	Dark Sky Compliance
	minimum distance (meters) lamp - object		luminaire part to be colored (F1)		Americans with Disabilities Act (less than 4" off the wall located between 27"-84" from floor)
	recessed depth		luminaire part to be colored (F2)		lamp protected against explosion
	ceiling thickness in mm		luminaire part to be colored (F3)		blown glass using traditional methods by master glass blower
	ceiling thickness selection		luminaire part to be colored (F4)		acoustic material
	dimmable DP (phase), DV (0-10V), DD (dali), DS (step-dim)		luminaire part to be colored (F5)		protection class I, protection insulation
	included or excluded LED driver/transformer/ control gear		color of 3-circuit adaptor		protection class II, protection insulation
	separately switchable		indirect diffuser		ETL Certified to UL and CSA Standards
	sensor	D	direct diffuser		UL Certified to UL and CSA Standards
	remote control		ball-proof (upon request)		CSA Certified to UL and CSA Standards
	available upon request		accessory		Certified for North American Standards

IP RATING

IP20	protected against ingress of solid bodies greater than 12.5mm (finger)
IP33	protected against ingress of solid bodies greater than 2.5mm protected against sprays of water up to 60 degrees from the vertical (rain)
IP40	protected against ingress of solid bodies greater than 1mm (wire) no protection against the ingress of moisture
IP43	protected against ingress of solid bodies greater than 1mm (wire) protected against sprays of water up to 60 degrees from the vertical (rain)
IP44	protected against ingress of solid bodies greater than 1mm (wire) protected against water splashed from all directions
IP54	protected against limited ingress of dust (wet rooms/covered outdoor areas) protected against water splashed from all directions
IP65	protected against ingress of dust protected against jets of water
IP66	protected against ingress of dust protected against powerful jets of water or heavy seas
IP67	protected against ingress of dust protected against immersion of water between 15cm - 1m for 30 minutes
IP68	protected against ingress of dust protected against immersion of water under pressure for long periods

IK RATING

IK01	protected against 0.14 joules impact (equivalent to 0.25kg mass dropped from 56mm above the surface)
IK02	protected against 0.2 joules impact (equivalent to 0.25kg mass dropped from 80mm above the surface)
IK03	protected against 0.35 joules impact (equivalent to 0.25kg mass dropped from 140mm above the surface)
IK04	protected against 0.5 joules impact (equivalent to 0.25kg mass dropped from 200mm above the surface)
IK05	protected against 0.7 joules impact (equivalent to 0.25kg mass dropped from 280mm above the surface)
IK06	protected against 1 joules impact (equivalent to 0.25kg mass dropped from 400mm above the surface)
IK07	protected against 2 joules impact (equivalent to 0.5kg mass dropped from 400mm above the surface)
IK08	protected against 5 joules impact (equivalent to 1.7kg mass dropped from 300mm above the surface)
IK09	protected against 10 joules impact (equivalent to 5.0kg mass dropped from 200mm above the surface)
IK10	protected against 20 joules impact (equivalent to 5.0kg mass dropped from 400mm above the surface)